DWG NO. MC5112

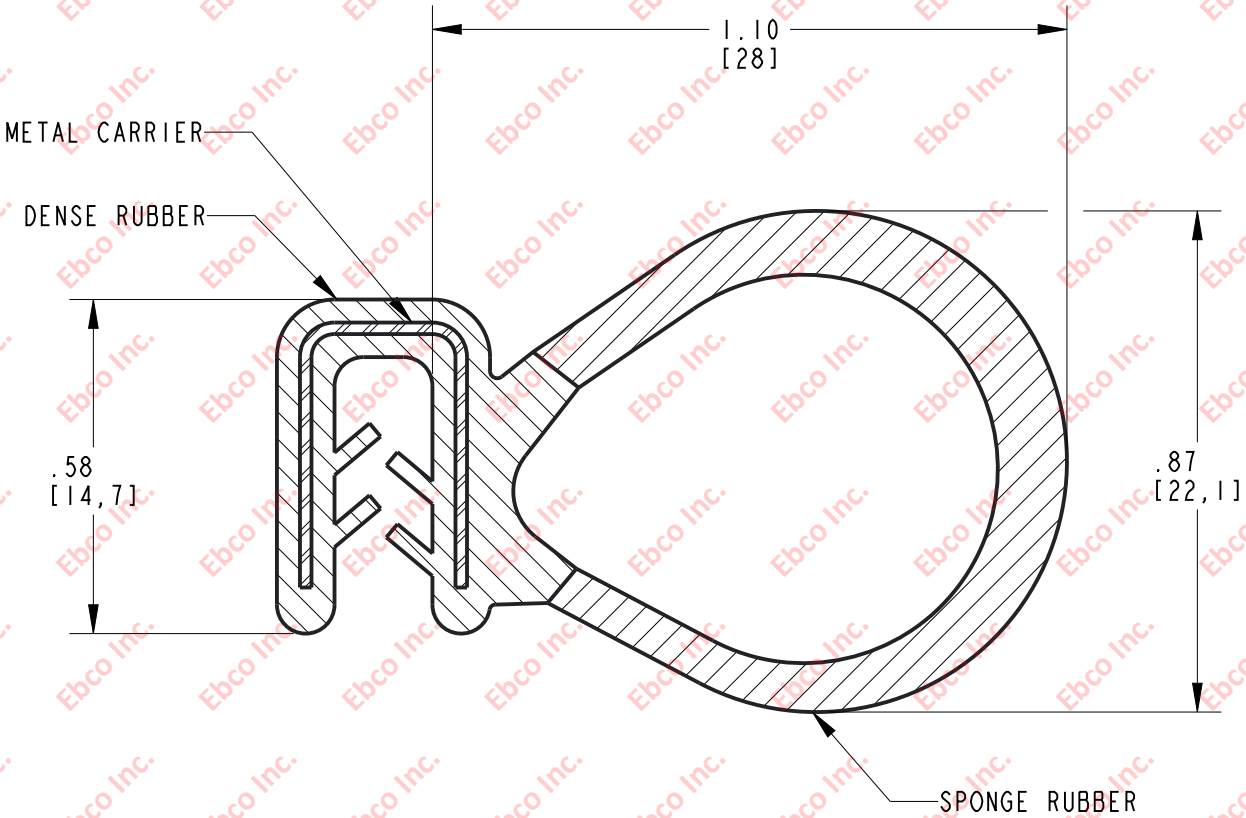

CLAMPING RANGE: .07 [1.85] - .16 [3.96]
EDGE TRIM: DENSE EPDM
SEALING BULB: SPONGE EPDM
METAL CARRIER: STEEL

Ebco

TITLE: MC5112

TOLERANCES PER RMA STANDARD E3 & BEC2	REV. B	DATE: 07-31-17
		UNITS INCH [MM]

1330 HOLMES RD. ELGIN, IL 60123

SPECIFICATIONS SUBJECT TO CHANGE