DWG NO. 2334A

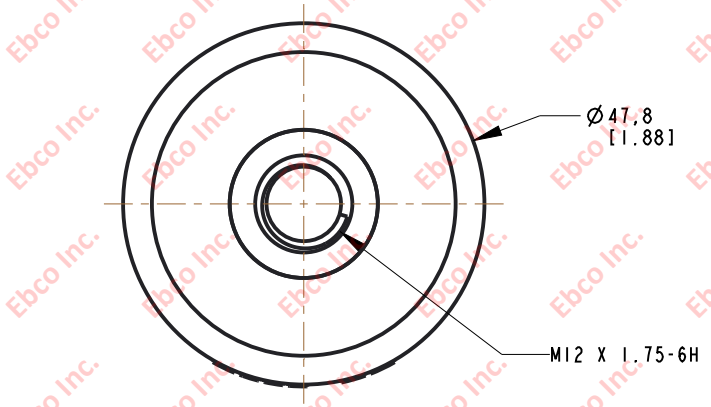

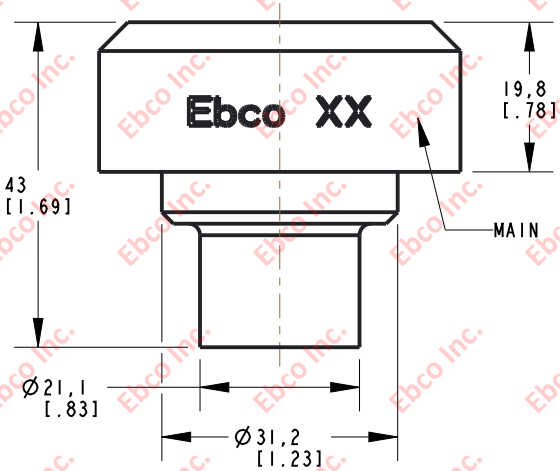

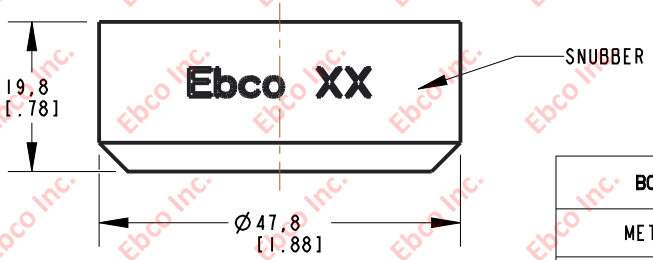

INSTALLATION VIEW (Shown under no load)

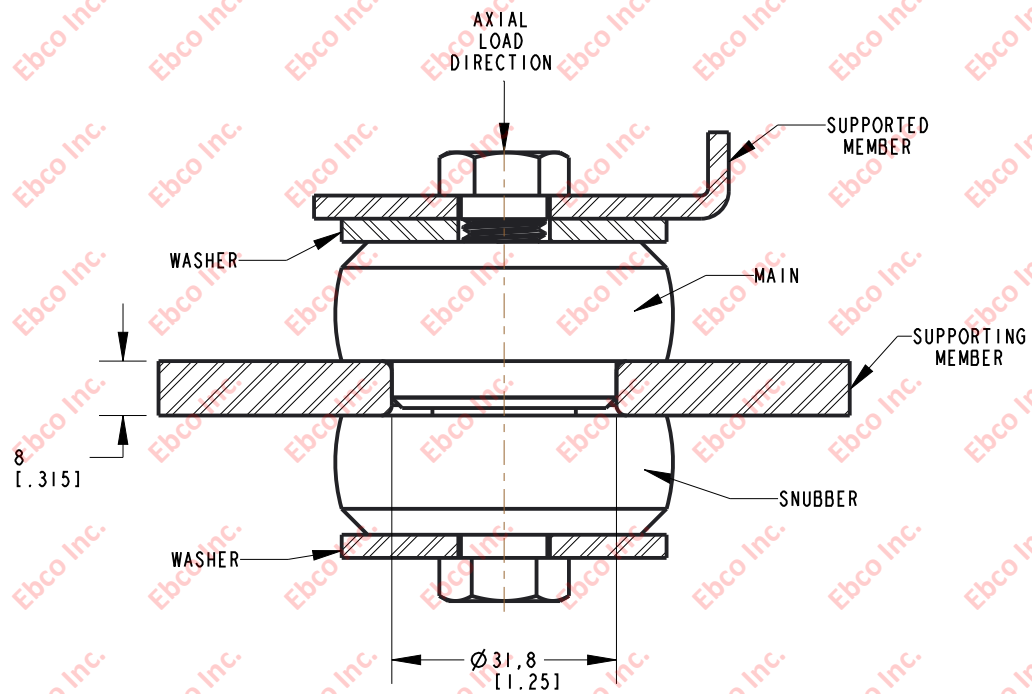

INSTALLATION DIMENSIONS

BOLT		TIGHTENING TORQUE			
METRIC		CLAMP LOAD		TIGHTENING TORQUE	
SIZE	CLASS	lb	N	ft-lb	N-m
M12	9.8	9240	41100	72.7	98.6

WASHER SPECIFICATIONS					
O.D.		I.D.		THICKNESS	
in	mm	in	mm	in	mm
2.13	54.10	.53	13.46	.134	3.40

SPECIFICATIONS

PART NUMBER		MAX. AXIAL DEFLECTION		MAX. AXIAL LOAD	
NATURAL RUBBER	NEOPRENE	in	mm	lb	N
2334A-78	2334A-88	.07	1.78	650	2891

Ebco

TITLE: 2334A

TOLERANCES PER RMA STANDARD A3 | REV. D | DATE: 07-19-21 | UNITS: mm [INCH]

1330 HOLMES RD. ELGIN, IL 60123

SPECIFICATIONS SUBJECT TO CHANGE