DWG NO. 4650

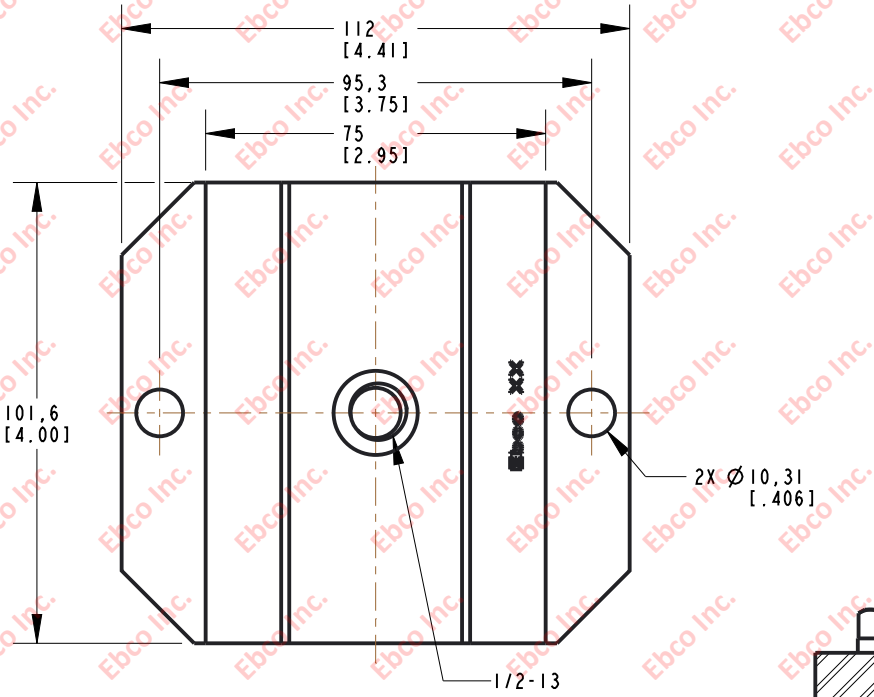

INSTALLATION VIEW (Shown under no load)

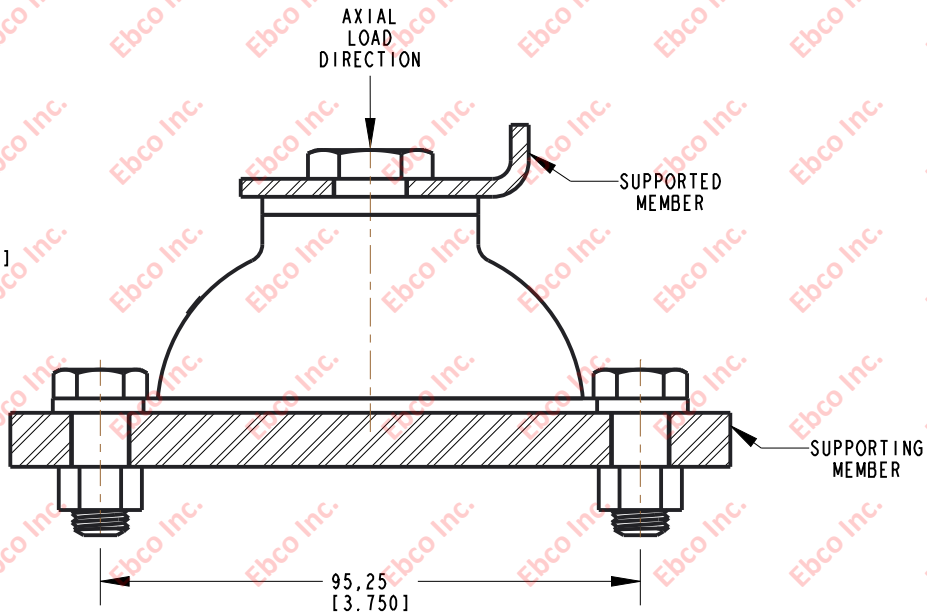

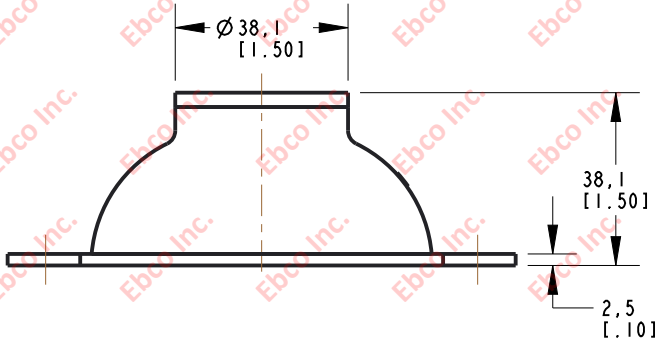

SPECIFICATIONS

PART NUMBER		MAX. AXIAL DEFLECTION		MAX. AXIAL LOAD	
NATURAL RUBBER	NEOPRENE	in	mm	lb	N
4650-71	4650-81	0.25	6.35	170	756
4650-72	4650-82			220	979
4650-73	4650-83			300	1334
4650-75	4650-85			430	1913
4650-76	4650-86			525	2336
4650-77	4650-87			600	2669

Ebco

TITLE: 4650

TOLERANCES PER RMA STANDARD A3

REV. C

DATE: 06-07-21

UNITS mm [INCH]

1330 HOLMES RD. ELGIN, IL 60123

SPECIFICATIONS SUBJECT TO CHANGE