DWG NO. 5148

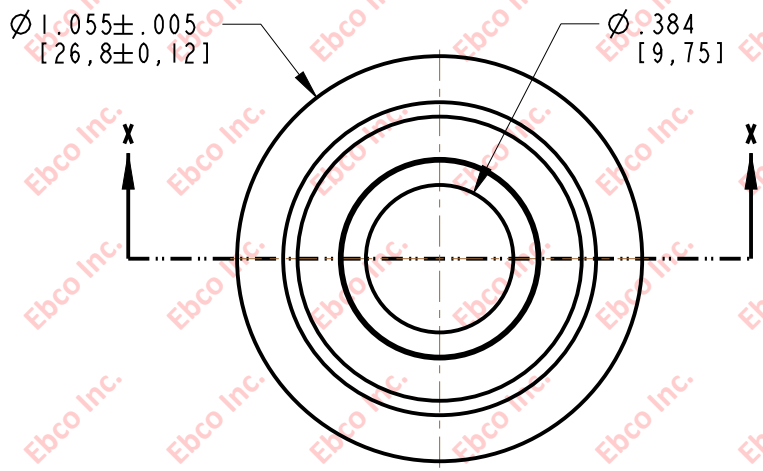

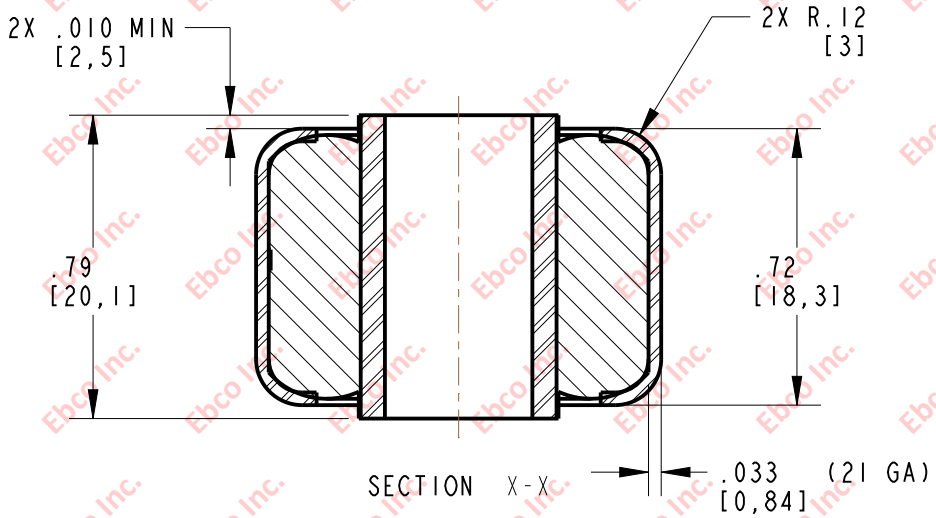

INSTALLATION VIEW (Shown under no load)

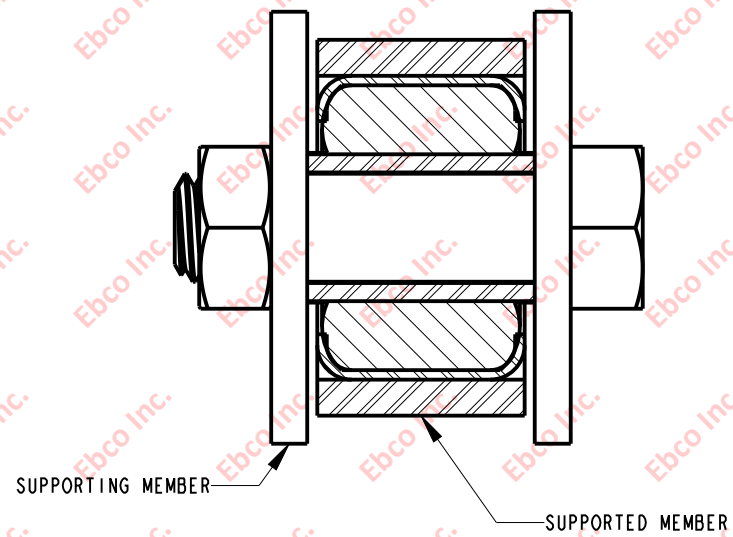

SPECIFICATIONS

PART NUMBER		MAX. RADIAL DEFLECTION		MAX. RADIAL LOAD	
NATURAL RUBBER	NEOPRENE	in	mm	lb	N
5148-75	5148-85	.01	.25	50	222
5148-77	5148-87			55	245

Ebco

TITLE: 5148

TOLERANCES PER RMA STANDARD A3 | REV. C | DATE: 07-20-17 | UNITS INCH [MM]

1330 HOLMES RD. ELGIN, IL 60123

SPECIFICATIONS SUBJECT TO CHANGE