DWG NO. 5315

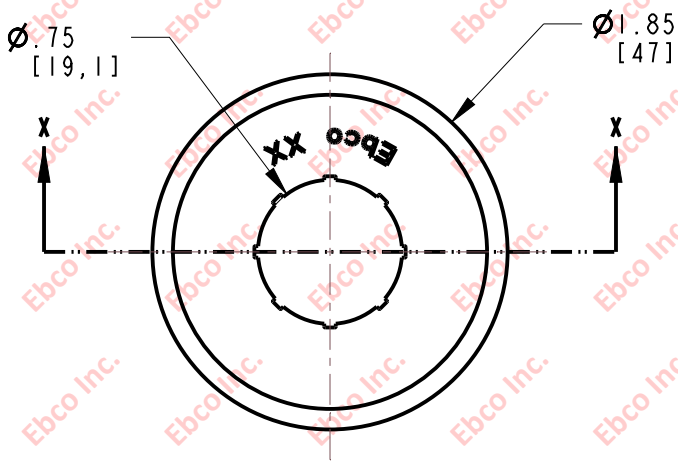


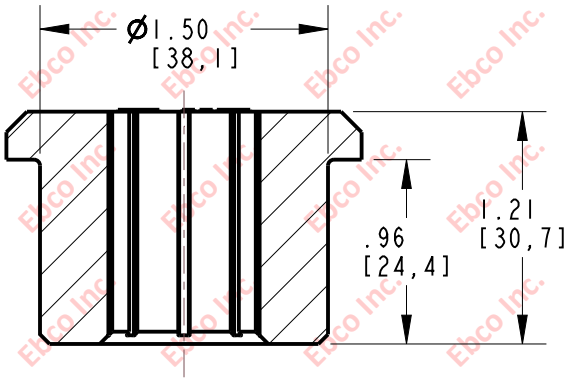


SECTION X-X

INSTALLATION VIEW (Shown under no load)

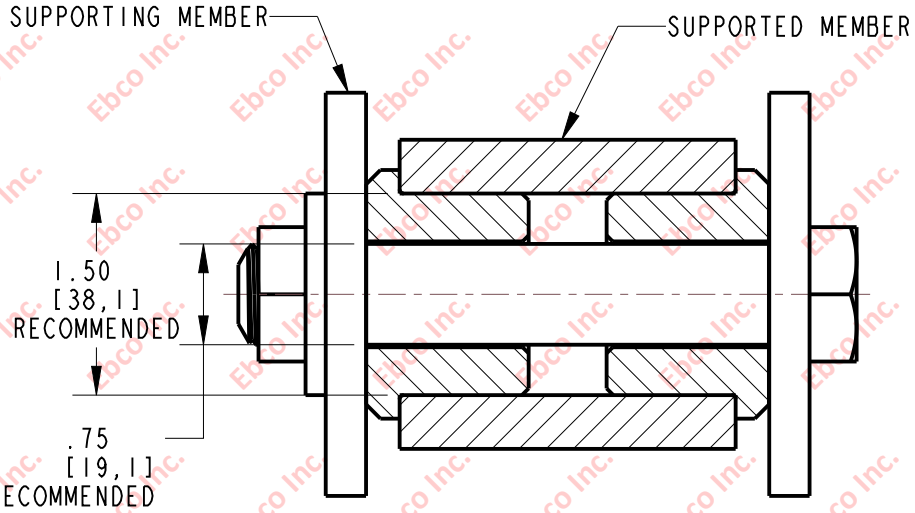


*AVAILABLE IN A VARIETY OF MATERIALS AND STIFFNESS

| | |
|---|---|
| TITLE: | 5315 |
| | THE INFORMATION CONTAINED IN THIS DRAWING IS THE SOLE PROPERTY OF EBCO ANY REPRODUCTION IN PART OR AS A WHOLE WITHOUT THE WRITEN PERMISSION OF EBCO IS PROHIBITED. |
| TOLERANCES PER RMA STANDARD A3 | REV. B |
| DATE: 06-22-20 | UNITS INCH [MM] |
| 1330 HOLMES RD. ELGIN, IL 60123 | |
| SPECIFICATIONS SUBJECT TO CHANGE | |