DWG NO. 6820

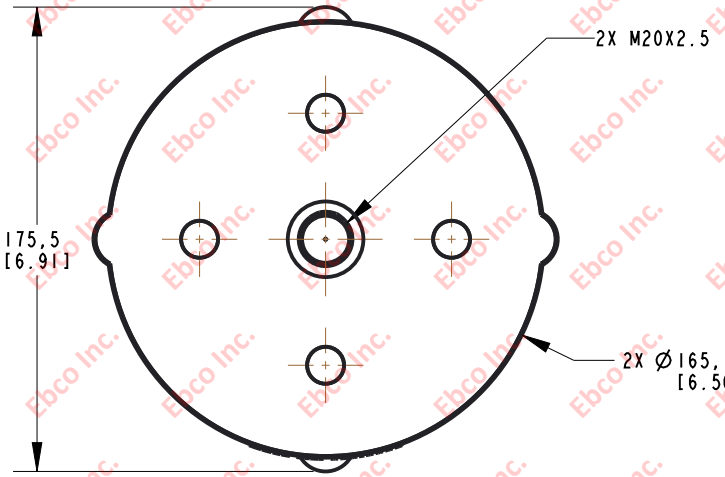

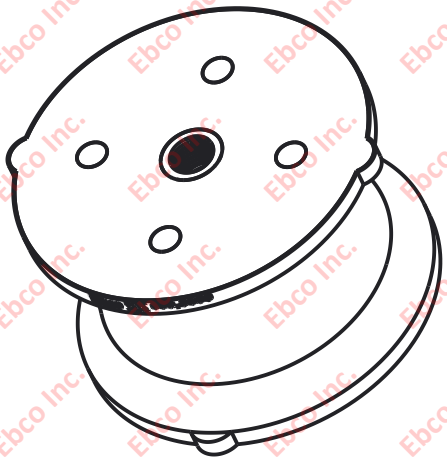

SCALE 0.300

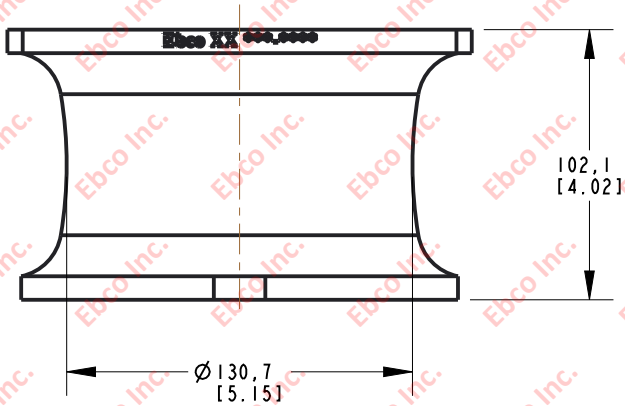

SPECIFICATIONS

PART NUMBER	MAX RECOMMENDED LOAD	RADIAL STIFFNESS
NATURAL RUBBER	LBS	LBS/IN
6820-75	750	1080
6820-76	800	1170
6820-77	900	1300

Ebco

TITLE: 6820

TOLERANCES PER RMA STANDARD A3

REV. D

DATE: 06-11-21

UNITS mm [INCH]

1330 HOLMES RD. ELGIN, IL 60123

SPECIFICATIONS SUBJECT TO CHANGE